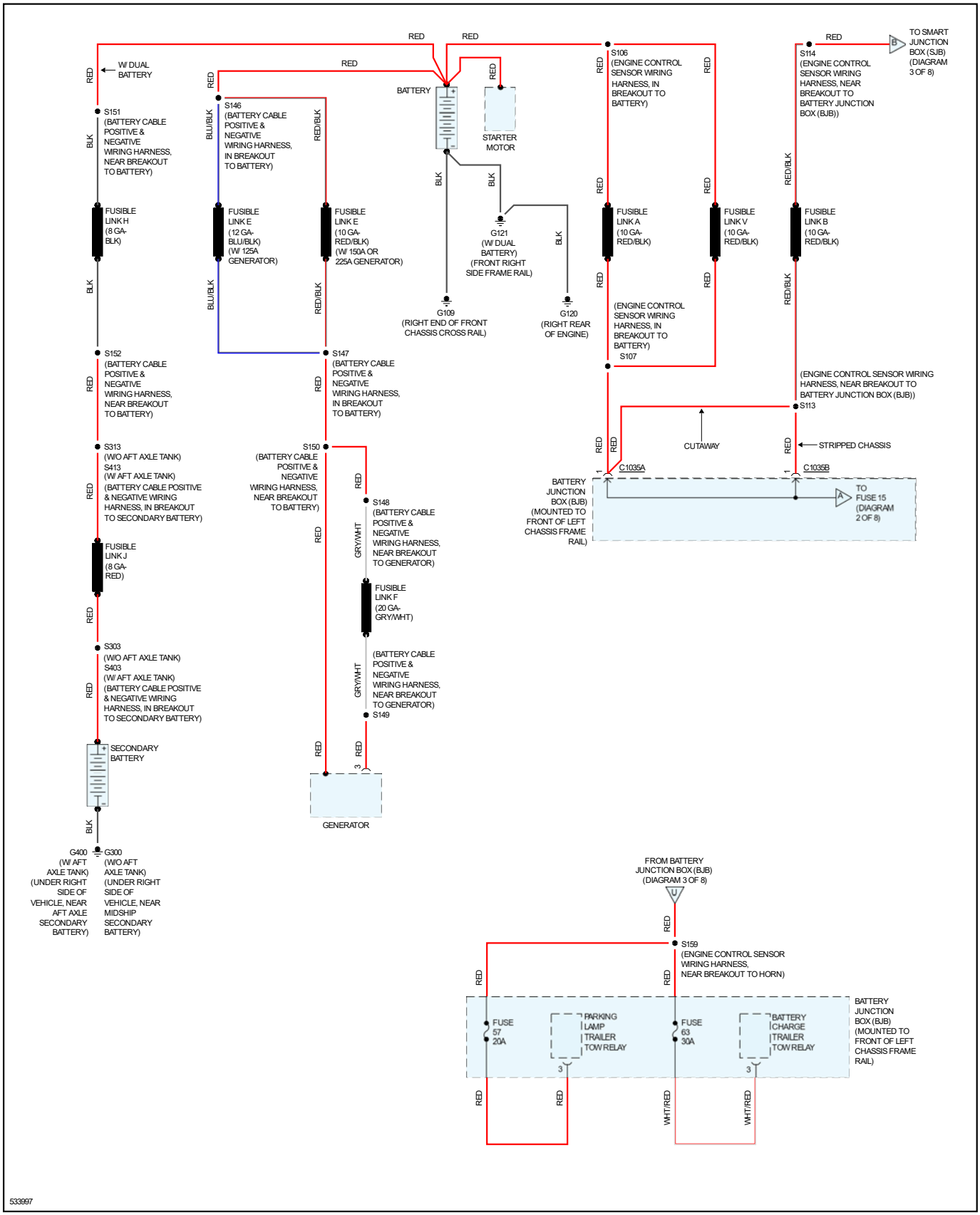
W/ DUAL BATTERY
S151 (BATTERY CABLE POSITIVE & NEGATIVE WIRING HARNESS, NEAR BREAKOUT TO BATTERY)
FUSIBLE LINK H (8 GA-BLK)
S152 (BATTERY CABLE POSITIVE & NEGATIVE WIRING HARNESS, NEAR BREAKOUT TO BATTERY)
S313 (W/O AFT AXLE TANK) S413 (W/ AFT AXLE TANK) (BATTERY CABLE POSITIVE & NEGATIVE WIRING HARNESS, IN BREAKOUT TO SECONDARY BATTERY)
FUSIBLE LINK J (8 GA-RED)
S303 (W/O AFT AXLE TANK) S403 (W/ AFT AXLE TANK) (BATTERY CABLE POSITIVE & NEGATIVE WIRING HARNESS, IN BREAKOUT TO SECONDARY BATTERY)
SECONDARY BATTERY
G400 (W/ AFT AXLE TANK) (UNDER RIGHT SIDE OF VEHICLE, NEAR AFT AXLE SECONDARY BATTERY)
G300 (W/O AFT AXLE TANK) (UNDER RIGHT SIDE OF VEHICLE, NEAR MIDSHIP SECONDARY BATTERY)
S146 (BATTERY CABLE POSITIVE & NEGATIVE WIRING HARNESS, IN BREAKOUT TO BATTERY)
FUSIBLE LINK E (12 GA-BLU/BLK) (W/ 125A GENERATOR)
FUSIBLE LINK E (10 GA-RED/BLK) (W/ 150A OR 225A GENERATOR)
S147 (BATTERY CABLE POSITIVE & NEGATIVE WIRING HARNESS, IN BREAKOUT TO BATTERY)
S150 (BATTERY CABLE POSITIVE & NEGATIVE WIRING HARNESS, NEAR BREAKOUT TO BATTERY)
S148 (BATTERY CABLE POSITIVE & NEGATIVE WIRING HARNESS, NEAR BREAKOUT TO GENERATOR)
FUSIBLE LINK F (20 GA-GRY/WHT)
(BATTERY CABLE POSITIVE & NEGATIVE WIRING HARNESS, NEAR BREAKOUT TO GENERATOR)
S149
GENERATOR
BATTERY
STARTER MOTOR
G121 (W/ DUAL BATTERY) (FRONT RIGHT SIDE FRAME RAIL)
G109 (RIGHT END OF FRONT CHASSIS CROSS RAIL)
G120 (RIGHT REAR OF ENGINE)
S106 (ENGINE CONTROL SENSOR WIRING HARNESS, IN BREAKOUT TO BATTERY)
FUSIBLE LINK A (10 GA-RED/BLK)
FUSIBLE LINK V (10 GA-RED/BLK)
(ENGINE CONTROL SENSOR WIRING HARNESS, IN BREAKOUT TO BATTERY) S107
S114 (ENGINE CONTROL SENSOR WIRING HARNESS, NEAR BREAKOUT TO BATTERY JUNCTION BOX (BJB))
TO SMART JUNCTION BOX (SJB) (DIAGRAM 3 OF 8)
FUSIBLE LINK B (10 GA-RED/BLK)
(ENGINE CONTROL SENSOR WIRING HARNESS, NEAR BREAKOUT TO BATTERY JUNCTION BOX (BJB))
S113
CUTAWAY
STRIPPED CHASSIS
C1035A
C1035B
BATTERY JUNCTION BOX (BJB) (MOUNTED TO FRONT OF LEFT CHASSIS FRAME RAIL)
TO FUSE 15 (DIAGRAM 2 OF 8)
FROM BATTERY JUNCTION BOX (BJB) (DIAGRAM 3 OF 8)
S159 (ENGINE CONTROL SENSOR WIRING HARNESS, NEAR BREAKOUT TO HORN)
FUSE 57 20A
PARKING LAMP TRAILER TOW RELAY
FUSE 63 30A
BATTERY CHARGE TRAILER TOW RELAY
BATTERY JUNCTION BOX (BJB) (MOUNTED TO FRONT OF LEFT CHASSIS FRAME RAIL)
533997

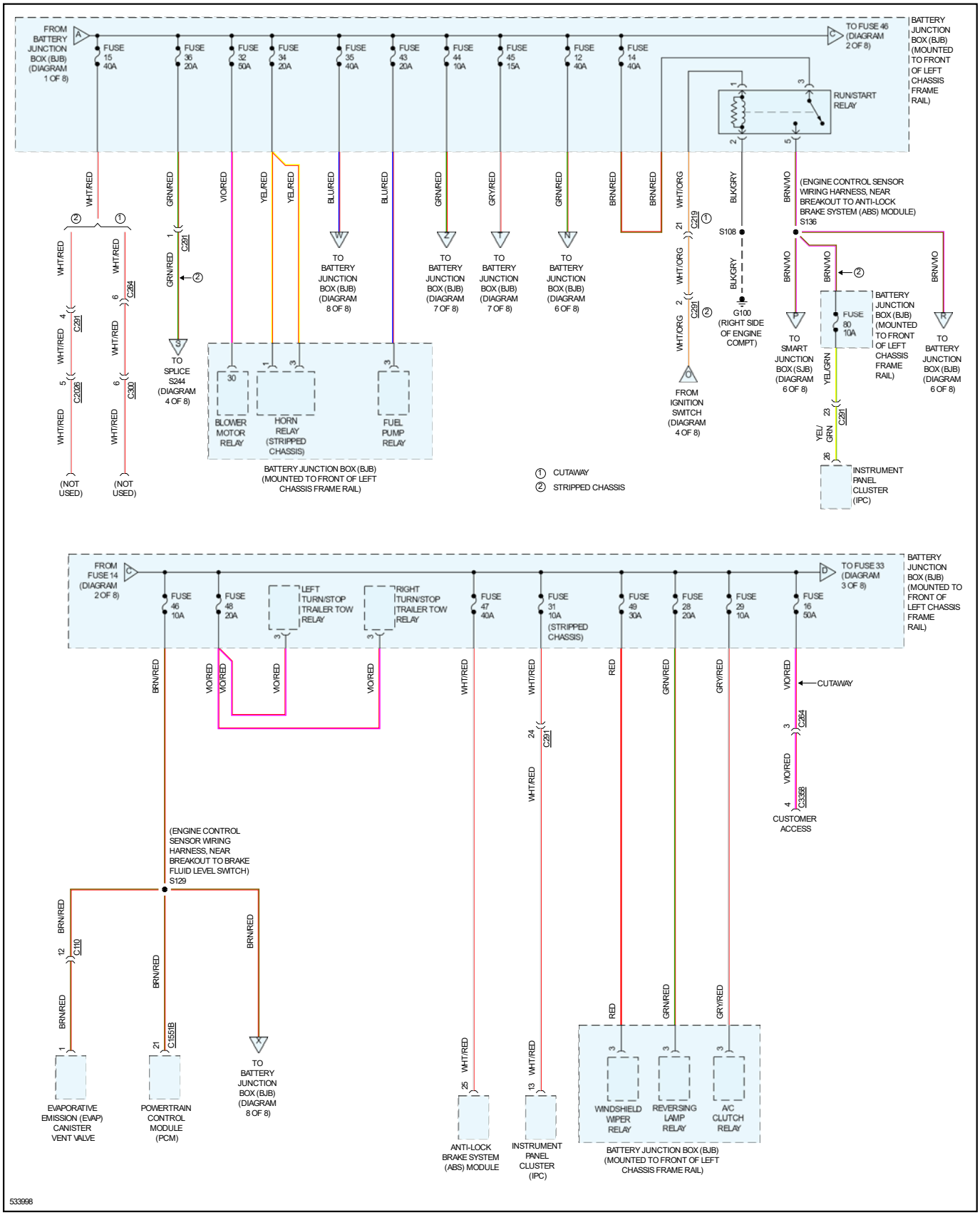
FROM BATTERY JUNCTION BOX (BJB) (DIAGRAM 1 OF 8)
FUSE 15 40A
FUSE 36 20A
FUSE 32 50A
FUSE 34 20A
FUSE 35 40A
FUSE 43 20A
FUSE 44 10A
FUSE 45 15A
FUSE 12 40A
FUSE 14 40A
TO FUSE 46 (DIAGRAM 2 OF 8)
BATTERY JUNCTION BOX (BJB) (MOUNTED TO FRONT OF LEFT CHASSIS FRAME RAIL)
RUN/START RELAY
WHT/RED
GRN/RED
VIO/RED
YEL/RED
BLU/RED
GRY/RED
BRN/RED
WHT/ORG
BLK/GRY
BRN/VIO
(ENGINE CONTROL SENSOR WIRING HARNESS, NEAR BREAKOUT TO ANTI-LOCK BRAKE SYSTEM (ABS) MODULE) S136
S108
G100 (RIGHT SIDE OF ENGINE COMPT)
TO BATTERY JUNCTION BOX (BJB) (DIAGRAM 8 OF 8)
TO BATTERY JUNCTION BOX (BJB) (DIAGRAM 7 OF 8)
TO BATTERY JUNCTION BOX (BJB) (DIAGRAM 7 OF 8)
TO BATTERY JUNCTION BOX (BJB) (DIAGRAM 6 OF 8)
TO SMART JUNCTION BOX (SJB) (DIAGRAM 6 OF 8)
FUSE 80 10A
TO BATTERY JUNCTION BOX (BJB) (DIAGRAM 6 OF 8)
TO SPLICE S244 (DIAGRAM 4 OF 8)
FROM IGNITION SWITCH (DIAGRAM 4 OF 8)
YEL/GRN
INSTRUMENT PANEL CLUSTER (IPC)
(NOT USED)
(NOT USED)
BLOWER MOTOR RELAY
HORN RELAY (STRIPPED CHASSIS)
FUEL PUMP RELAY
BATTERY JUNCTION BOX (BJB) (MOUNTED TO FRONT OF LEFT CHASSIS FRAME RAIL)
① CUTAWAY
② STRIPPED CHASSIS
FROM FUSE 14 (DIAGRAM 2 OF 8)
FUSE 46 10A
FUSE 48 20A
LEFT TURN/STOP TRAILER TOW RELAY
RIGHT TURN/STOP TRAILER TOW RELAY
FUSE 47 40A
FUSE 31 10A (STRIPPED CHASSIS)
FUSE 49 30A
FUSE 28 20A
FUSE 29 10A
FUSE 16 50A
TO FUSE 33 (DIAGRAM 3 OF 8)
BATTERY JUNCTION BOX (BJB) (MOUNTED TO FRONT OF LEFT CHASSIS FRAME RAIL)
BRN/RED
VIO/RED
WHT/RED
RED
GRN/RED
GRY/RED
CUTAWAY
CUSTOMER ACCESS
(ENGINE CONTROL SENSOR WIRING HARNESS, NEAR BREAKOUT TO BRAKE FLUID LEVEL SWITCH) S129
EVAPORATIVE EMISSION (EVAP) CANISTER VENT VALVE
POWERTRAIN CONTROL MODULE (PCM)
TO BATTERY JUNCTION BOX (BJB) (DIAGRAM 8 OF 8)
ANTI-LOCK BRAKE SYSTEM (ABS) MODULE
INSTRUMENT PANEL CLUSTER (IPC)
WINDSHIELD WIPER RELAY
REVERSING LAMP RELAY
A/C CLUTCH RELAY
BATTERY JUNCTION BOX (BJB) (MOUNTED TO FRONT OF LEFT CHASSIS FRAME RAIL)
533998

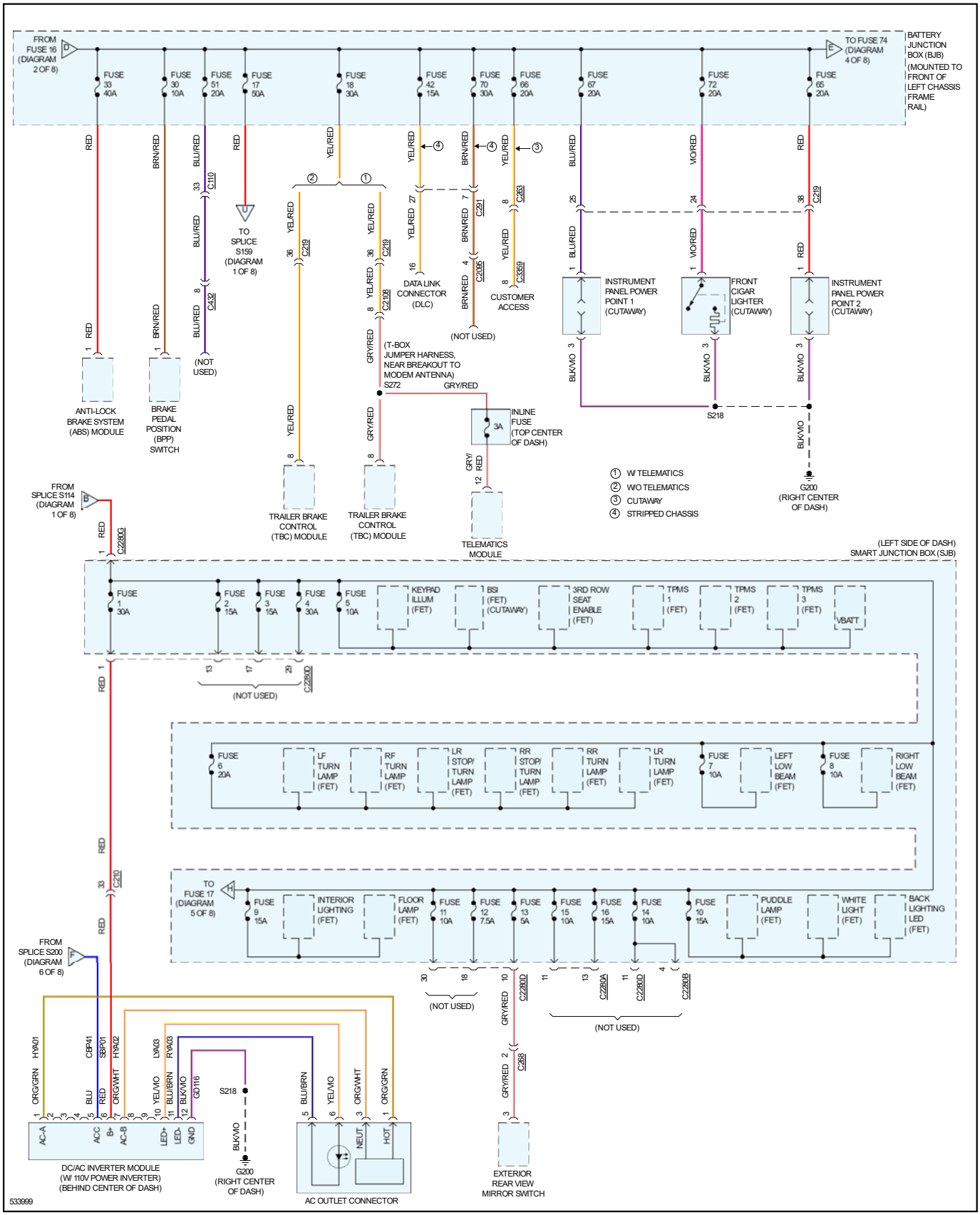
FROM FUSE 16 (DIAGRAM 2 OF 8)
TO FUSE 74 (DIAGRAM 4 OF 8)
BATTERY JUNCTION BOX (BJB) (MOUNTED TO FRONT OF LEFT CHASSIS FRAME RAIL)
FUSE 33 40A
FUSE 30 10A
FUSE 51 20A
FUSE 17 50A
FUSE 18 30A
FUSE 42 15A
FUSE 70 30A
FUSE 66 20A
FUSE 67 20A
FUSE 72 20A
FUSE 65 20A
TO SPLICE S159 (DIAGRAM 1 OF 8)
DATA LINK CONNECTOR (DLC)
CUSTOMER ACCESS
(NOT USED)
(T-BOX JUMPER HARNESS, NEAR BREAKOUT TO MODEM ANTENNA) S272
INSTRUMENT PANEL POWER POINT 1 (CUTAWAY)
FRONT CIGAR LIGHTER (CUTAWAY)
INSTRUMENT PANEL POWER POINT 2 (CUTAWAY)
ANTI-LOCK BRAKE SYSTEM (ABS) MODULE
BRAKE PEDAL POSITION (BPP) SWITCH
INLINE FUSE (TOP CENTER OF DASH)
TRAILER BRAKE CONTROL (TBC) MODULE
TRAILER BRAKE CONTROL (TBC) MODULE
TELEMATICS MODULE
S218
G200 (RIGHT CENTER OF DASH)
1 W/ TELEMATICS
2 W/O TELEMATICS
3 CUTAWAY
4 STRIPPED CHASSIS
FROM SPLICE S114 (DIAGRAM 1 OF 8)
(LEFT SIDE OF DASH) SMART JUNCTION BOX (SJB)
FUSE 1 30A
FUSE 2 15A
FUSE 3 15A
FUSE 4 30A
FUSE 5 10A
KEYPAD ILLUM (FET)
BSI (FET) (CUTAWAY)
3RD ROW SEAT ENABLE (FET)
TPMS 1 (FET)
TPMS 2 (FET)
TPMS 3 (FET)
VBATT
(NOT USED)
FUSE 6 20A
LF TURN LAMP (FET)
RF TURN LAMP (FET)
LR STOP/ TURN LAMP (FET)
RR STOP/ TURN LAMP (FET)
RR TURN LAMP (FET)
LR TURN LAMP (FET)
FUSE 7 10A
LEFT LOW BEAM (FET)
FUSE 8 10A
RIGHT LOW BEAM (FET)
TO FUSE 17 (DIAGRAM 5 OF 8)
FUSE 9 15A
INTERIOR LIGHTING (FET)
FLOOR LAMP (FET)
FUSE 11 10A
FUSE 12 7.5A
FUSE 13 5A
FUSE 15 10A
FUSE 16 15A
FUSE 14 10A
FUSE 10 15A
PUDDLE LAMP (FET)
WHITE LIGHT (FET)
BACK LIGHTING LED (FET)
FROM SPLICE S200 (DIAGRAM 6 OF 8)
(NOT USED)
DC/AC INVERTER MODULE (W/ 110V POWER INVERTER) (BEHIND CENTER OF DASH)
G200 (RIGHT CENTER OF DASH)
AC OUTLET CONNECTOR
EXTERIOR REAR VIEW MIRROR SWITCH
533999

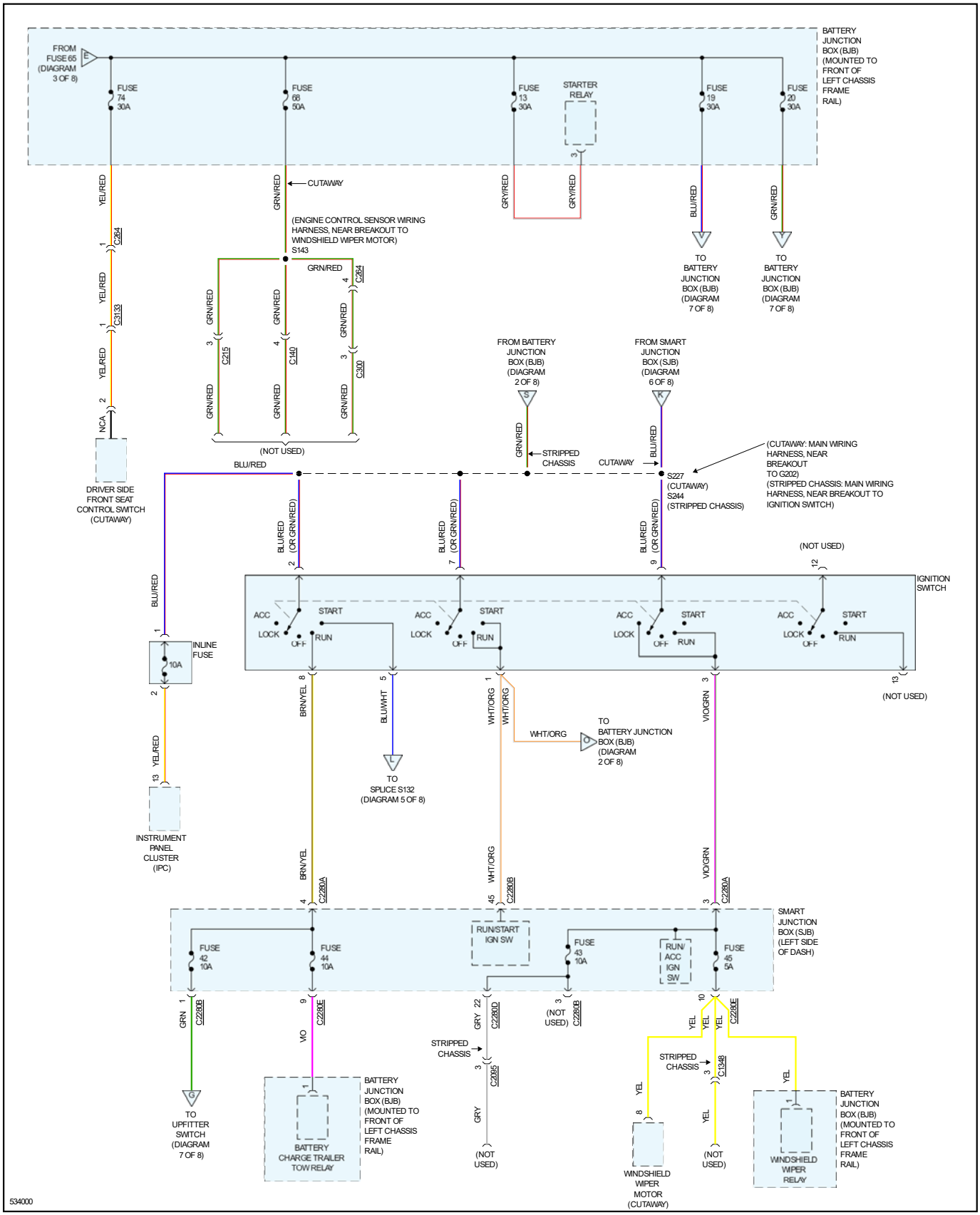
FROM FUSE 65 (DIAGRAM 3 OF 8)
BATTERY JUNCTION BOX (BJB) (MOUNTED TO FRONT OF LEFT CHASSIS FRAME RAIL)
FUSE 74 30A
FUSE 68 50A
FUSE 13 30A
STARTER RELAY
FUSE 19 30A
FUSE 20 30A
YEL/RED
GRN/RED
CUTAWAY
GRY/RED
BLU/RED
TO BATTERY JUNCTION BOX (BJB) (DIAGRAM 7 OF 8)
(ENGINE CONTROL SENSOR WIRING HARNESS, NEAR BREAKOUT TO WINDSHIELD WIPER MOTOR) S143
C264
C3133
C215
C140
C300
(NOT USED)
NCA
DRIVER SIDE FRONT SEAT CONTROL SWITCH (CUTAWAY)
FROM BATTERY JUNCTION BOX (BJB) (DIAGRAM 2 OF 8)
FROM SMART JUNCTION BOX (SJB) (DIAGRAM 6 OF 8)
STRIPPED CHASSIS
S227 (CUTAWAY) S244 (STRIPPED CHASSIS)
(CUTAWAY: MAIN WIRING HARNESS, NEAR BREAKOUT TO G202) (STRIPPED CHASSIS: MAIN WIRING HARNESS, NEAR BREAKOUT TO IGNITION SWITCH)
BLU/RED (OR GRN/RED)
IGNITION SWITCH
ACC
LOCK
OFF
START
RUN
INLINE FUSE
10A
YEL/RED
INSTRUMENT PANEL CLUSTER (IPC)
BRN/YEL
BLU/WHT
TO SPLICE S132 (DIAGRAM 5 OF 8)
WHT/ORG
TO BATTERY JUNCTION BOX (BJB) (DIAGRAM 2 OF 8)
VIO/GRN
C2280A
C2280B
SMART JUNCTION BOX (SJB) (LEFT SIDE OF DASH)
FUSE 42 10A
FUSE 44 10A
RUN/START IGN SW
FUSE 43 10A
RUN/ ACC IGN SW
FUSE 45 5A
GRN
C2280E
VIO
C2280D
GRY
C2095
YEL
C1348
TO UPFITTER SWITCH (DIAGRAM 7 OF 8)
BATTERY CHARGE TRAILER TOW RELAY
WINDSHIELD WIPER MOTOR (CUTAWAY)
WINDSHIELD WIPER RELAY
534000

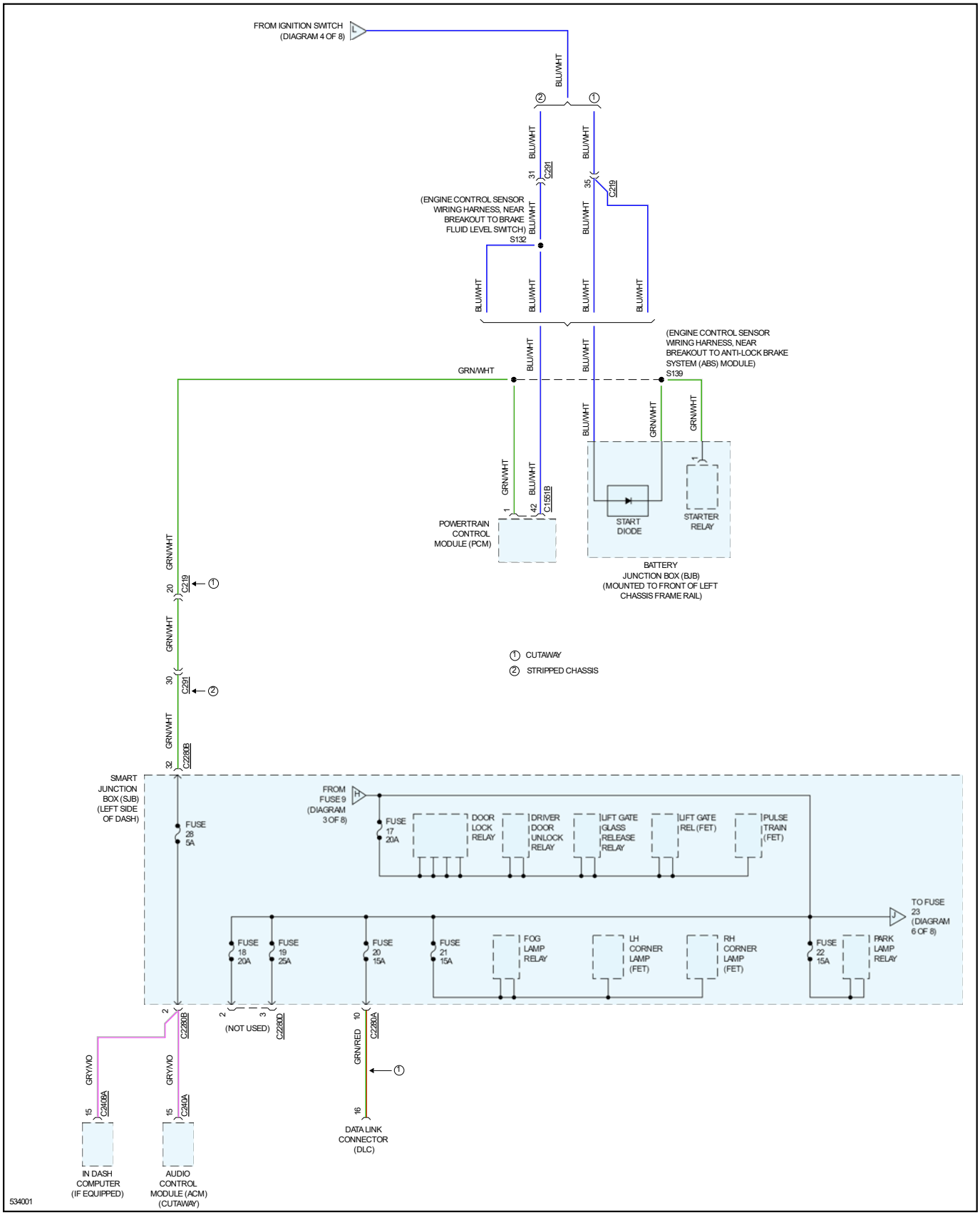
FROM IGNITION SWITCH (DIAGRAM 4 OF 8)
BLU/WHT
(ENGINE CONTROL SENSOR WIRING HARNESS, NEAR BREAKOUT TO BRAKE FLUID LEVEL SWITCH) S132
(ENGINE CONTROL SENSOR WIRING HARNESS, NEAR BREAKOUT TO ANTI-LOCK BRAKE SYSTEM (ABS) MODULE) S139
GRN/WHT
GRN/RED
POWERTRAIN CONTROL MODULE (PCM)
START DIODE
STARTER RELAY
BATTERY JUNCTION BOX (BJB) (MOUNTED TO FRONT OF LEFT CHASSIS FRAME RAIL)
CUTAWAY
STRIPPED CHASSIS
SMART JUNCTION BOX (SJB) (LEFT SIDE OF DASH)
FROM FUSE 9 (DIAGRAM 3 OF 8)
FUSE 28 5A
FUSE 17 20A
DOOR LOCK RELAY
DRIVER DOOR UNLOCK RELAY
LIFT GATE GLASS RELEASE RELAY
LIFT GATE REL (FET)
PULSE TRAIN (FET)
TO FUSE 23 (DIAGRAM 6 OF 8)
FUSE 18 20A
FUSE 19 25A
FUSE 20 15A
FUSE 21 15A
FOG LAMP RELAY
LH CORNER LAMP (FET)
RH CORNER LAMP (FET)
FUSE 22 15A
PARK LAMP RELAY
(NOT USED)
GRY/VIO
IN DASH COMPUTER (IF EQUIPPED)
AUDIO CONTROL MODULE (ACM) (CUTAWAY)
DATA LINK CONNECTOR (DLC)
534001

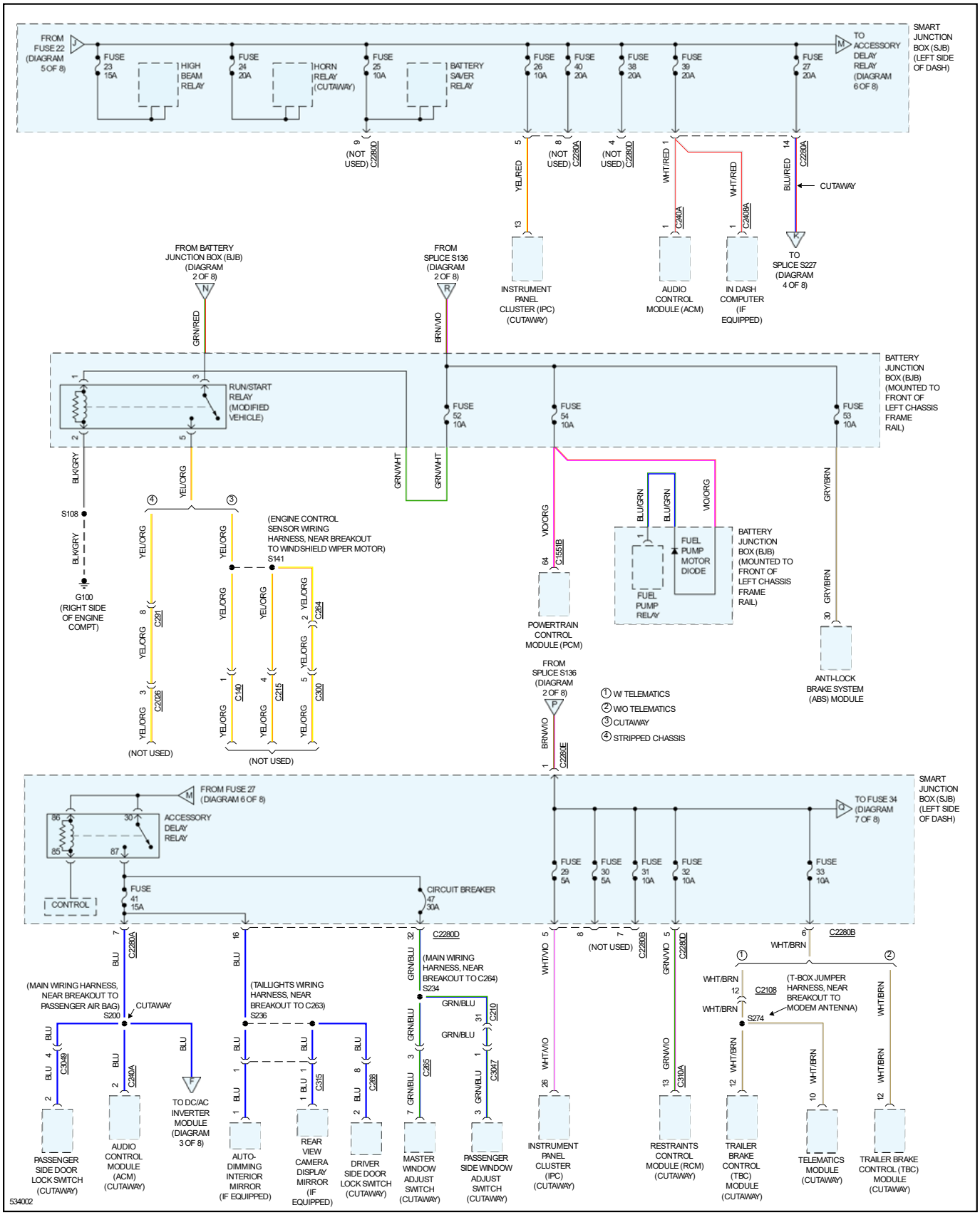
FROM FUSE 22 (DIAGRAM 5 OF 8)
FUSE 23 15A
HIGH BEAM RELAY
FUSE 24 20A
HORN RELAY (CUTAWAY)
FUSE 25 10A
BATTERY SAVER RELAY
FUSE 26 10A
FUSE 40 20A
FUSE 38 20A
FUSE 39 20A
FUSE 27 20A
TO ACCESSORY DELAY RELAY (DIAGRAM 6 OF 8)
SMART JUNCTION BOX (SJB) (LEFT SIDE OF DASH)
(NOT USED) C2280D
(NOT USED) C2280A
(NOT USED) C2280D
YEL/RED
WHT/RED
WHT/RED
BLU/RED
C2280A
CUTAWAY
C2401A
C2409A
TO SPLICE S227 (DIAGRAM 4 OF 8)
INSTRUMENT PANEL CLUSTER (IPC) (CUTAWAY)
AUDIO CONTROL MODULE (ACM)
IN DASH COMPUTER (IF EQUIPPED)
FROM BATTERY JUNCTION BOX (BJB) (DIAGRAM 2 OF 8)
FROM SPLICE S136 (DIAGRAM 2 OF 8)
GRN/RED
BRN/VIO
RUN/START RELAY (MODIFIED VEHICLE)
FUSE 52 10A
FUSE 54 10A
FUSE 53 10A
BATTERY JUNCTION BOX (BJB) (MOUNTED TO FRONT OF LEFT CHASSIS FRAME RAIL)
BLK/GRY
YEL/ORG
GRN/WHT
GRN/WHT
VIO/ORG
BLU/GRN
BLU/GRN
VIO/ORG
GRY/BRN
S108
BLK/GRY
G100 (RIGHT SIDE OF ENGINE COMPT)
YEL/ORG
C291
YEL/ORG
C2026
(NOT USED)
(ENGINE CONTROL SENSOR WIRING HARNESS, NEAR BREAKOUT TO WINDSHIELD WIPER MOTOR) S141
YEL/ORG
C140
YEL/ORG
C215
YEL/ORG
C264
YEL/ORG
C300
(NOT USED)
C1551B
POWERTRAIN CONTROL MODULE (PCM)
FUEL PUMP MOTOR DIODE
FUEL PUMP RELAY
BATTERY JUNCTION BOX (BJB) (MOUNTED TO FRONT OF LEFT CHASSIS FRAME RAIL)
GRY/BRN
ANTI-LOCK BRAKE SYSTEM (ABS) MODULE
FROM SPLICE S136 (DIAGRAM 2 OF 8)
BRN/VIO
C2280E
① W/ TELEMATICS
② W/O TELEMATICS
③ CUTAWAY
④ STRIPPED CHASSIS
FROM FUSE 27 (DIAGRAM 6 OF 8)
ACCESSORY DELAY RELAY
CONTROL
FUSE 41 15A
CIRCUIT BREAKER 47 30A
FUSE 29 5A
FUSE 30 5A
FUSE 31 10A
FUSE 32 10A
FUSE 33 10A
TO FUSE 34 (DIAGRAM 7 OF 8)
SMART JUNCTION BOX (SJB) (LEFT SIDE OF DASH)
BLU
C2280A
BLU
C2280D
GRN/BLU
(MAIN WIRING HARNESS, NEAR BREAKOUT TO C264) S234
WHT/VIO
(NOT USED)
C2280B
GRN/VIO
C2280D
WHT/BRN
C2280B
(MAIN WIRING HARNESS, NEAR BREAKOUT TO PASSENGER AIR BAG) S200
CUTAWAY
(TAILLIGHTS WIRING HARNESS, NEAR BREAKOUT TO C263) S236
GRN/BLU
C210
GRN/BLU
WHT/BRN
C2108
(T-BOX JUMPER HARNESS, NEAR BREAKOUT TO MODEM ANTENNA)
WHT/BRN
S274
C3049
C2401A
C315
C288
C265
C3947
C310A
TO DC/AC INVERTER MODULE (DIAGRAM 3 OF 8)
PASSENGER SIDE DOOR LOCK SWITCH (CUTAWAY)
AUDIO CONTROL MODULE (ACM) (CUTAWAY)
AUTO-DIMMING INTERIOR MIRROR (IF EQUIPPED)
REAR VIEW CAMERA DISPLAY MIRROR (IF EQUIPPED)
DRIVER SIDE DOOR LOCK SWITCH (CUTAWAY)
MASTER WINDOW ADJUST SWITCH (CUTAWAY)
PASSENGER SIDE WINDOW ADJUST SWITCH (CUTAWAY)
INSTRUMENT PANEL CLUSTER (IPC) (CUTAWAY)
RESTRAINTS CONTROL MODULE (RCM) (CUTAWAY)
TRAILER BRAKE CONTROL (TBC) MODULE (CUTAWAY)
TELEMATICS MODULE (CUTAWAY)
TRAILER BRAKE CONTROL (TBC) MODULE (CUTAWAY)
534002

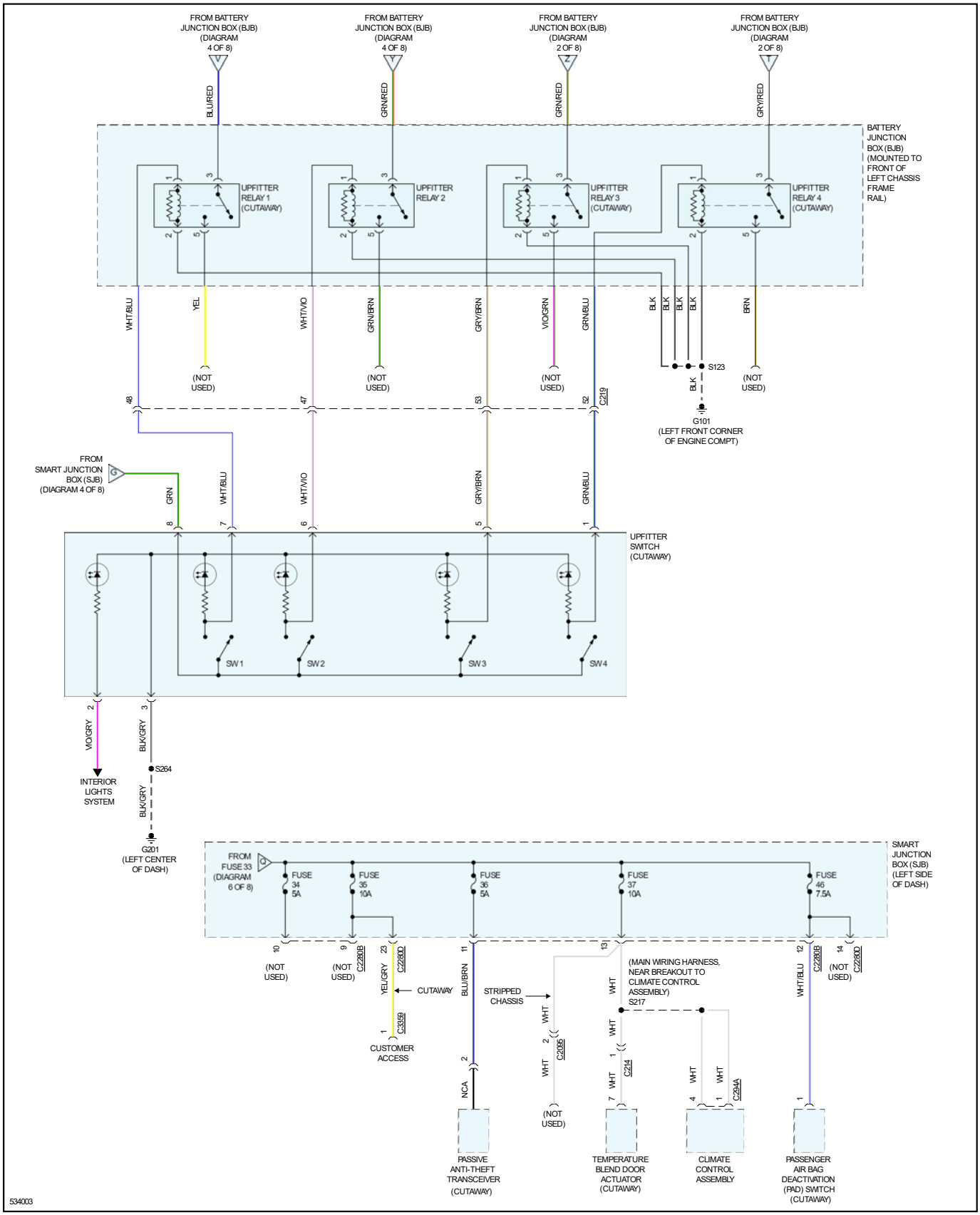
FROM BATTERY JUNCTION BOX (BJB) (DIAGRAM 4 OF 8)
FROM BATTERY JUNCTION BOX (BJB) (DIAGRAM 4 OF 8)
FROM BATTERY JUNCTION BOX (BJB) (DIAGRAM 2 OF 8)
FROM BATTERY JUNCTION BOX (BJB) (DIAGRAM 2 OF 8)
BLU/RED
GRN/RED
GRN/RED
GRY/RED
BATTERY JUNCTION BOX (BJB) (MOUNTED TO FRONT OF LEFT CHASSIS FRAME RAIL)
UPFITTER RELAY 1 (CUTAWAY)
UPFITTER RELAY 2
UPFITTER RELAY 3 (CUTAWAY)
UPFITTER RELAY 4 (CUTAWAY)
WHT/BLU
YEL
WHT/VIO
GRN/BRN
GRY/BRN
VIO/GRN
GRN/BLU
BLK
BRN
(NOT USED)
S123
G101 (LEFT FRONT CORNER OF ENGINE COMPT)
C219
FROM SMART JUNCTION BOX (SJB) (DIAGRAM 4 OF 8)
GRN
UPFITTER SWITCH (CUTAWAY)
SW 1
SW 2
SW 3
SW 4
VIO/GRY
BLK/GRY
S264
INTERIOR LIGHTS SYSTEM
G201 (LEFT CENTER OF DASH)
FROM FUSE 33 (DIAGRAM 6 OF 8)
FUSE 34 5A
FUSE 35 10A
FUSE 36 5A
FUSE 37 10A
FUSE 46 7.5A
SMART JUNCTION BOX (SJB) (LEFT SIDE OF DASH)
C2280B
C2280D
YEL/GRY
CUTAWAY
C3359
CUSTOMER ACCESS
BLU/BRN
STRIPPED CHASSIS
(MAIN WIRING HARNESS, NEAR BREAKOUT TO CLIMATE CONTROL ASSEMBLY)
S217
WHT
C2095
C214
C294A
NCA
WHT/BLU
PASSIVE ANTI-THEFT TRANSCEIVER (CUTAWAY)
TEMPERATURE BLEND DOOR ACTUATOR (CUTAWAY)
CLIMATE CONTROL ASSEMBLY
PASSENGER AIR BAG DEACTIVATION (PAD) SWITCH (CUTAWAY)
534003

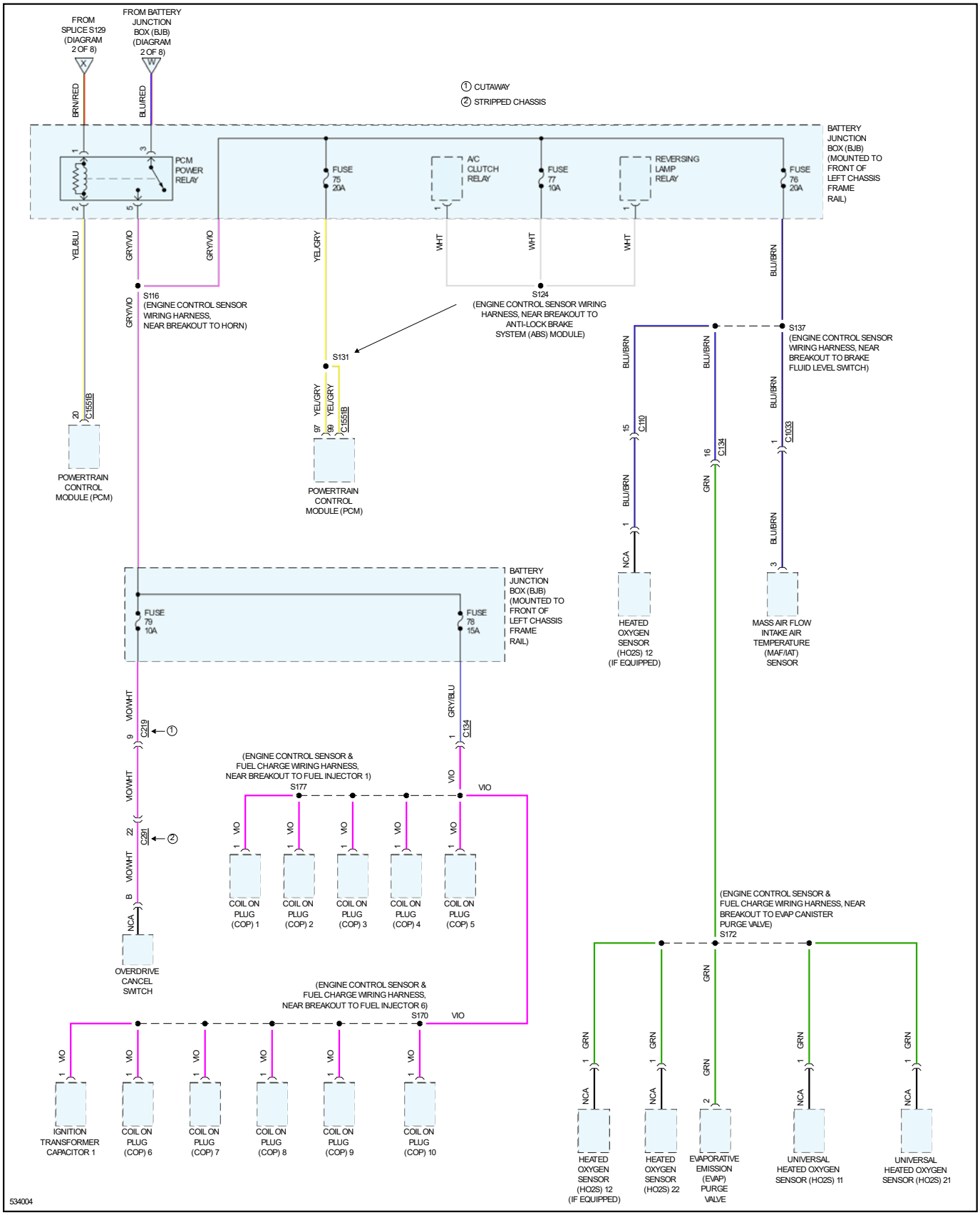
FROM SPLICE S129 (DIAGRAM 2 OF 8)
FROM BATTERY JUNCTION BOX (BJB) (DIAGRAM 2 OF 8)
BRN/RED
BLU/RED
① CUTAWAY
② STRIPPED CHASSIS
BATTERY JUNCTION BOX (BJB) (MOUNTED TO FRONT OF LEFT CHASSIS FRAME RAIL)
PCM POWER RELAY
FUSE 75 20A
A/C CLUTCH RELAY
FUSE 77 10A
REVERSING LAMP RELAY
FUSE 76 20A
YEL/BLU
GRY/VIO
YEL/GRY
WHT
BLU/BRN
S116 (ENGINE CONTROL SENSOR WIRING HARNESS, NEAR BREAKOUT TO HORN)
S124 (ENGINE CONTROL SENSOR WIRING HARNESS, NEAR BREAKOUT TO ANTI-LOCK BRAKE SYSTEM (ABS) MODULE)
S137 (ENGINE CONTROL SENSOR WIRING HARNESS, NEAR BREAKOUT TO BRAKE FLUID LEVEL SWITCH)
S131
C1551B
POWERTRAIN CONTROL MODULE (PCM)
C110
C134
C1033
HEATED OXYGEN SENSOR (HO2S) 12 (IF EQUIPPED)
MASS AIR FLOW INTAKE AIR TEMPERATURE (MAF/IAT) SENSOR
BATTERY JUNCTION BOX (BJB) (MOUNTED TO FRONT OF LEFT CHASSIS FRAME RAIL)
FUSE 79 10A
FUSE 78 15A
VIO/WHT
GRY/BLU
C219
C291
(ENGINE CONTROL SENSOR & FUEL CHARGE WIRING HARNESS, NEAR BREAKOUT TO FUEL INJECTOR 1) S177
VIO
COIL ON PLUG (COP) 1
COIL ON PLUG (COP) 2
COIL ON PLUG (COP) 3
COIL ON PLUG (COP) 4
COIL ON PLUG (COP) 5
OVERDRIVE CANCEL SWITCH
(ENGINE CONTROL SENSOR & FUEL CHARGE WIRING HARNESS, NEAR BREAKOUT TO EVAP CANISTER PURGE VALVE) S172
GRN
(ENGINE CONTROL SENSOR & FUEL CHARGE WIRING HARNESS, NEAR BREAKOUT TO FUEL INJECTOR 6) S170
IGNITION TRANSFORMER CAPACITOR 1
COIL ON PLUG (COP) 6
COIL ON PLUG (COP) 7
COIL ON PLUG (COP) 8
COIL ON PLUG (COP) 9
COIL ON PLUG (COP) 10
HEATED OXYGEN SENSOR (HO2S) 12 (IF EQUIPPED)
HEATED OXYGEN SENSOR (HO2S) 22
EVAPORATIVE EMISSION (EVAP) PURGE VALVE
UNIVERSAL HEATED OXYGEN SENSOR (HO2S) 11
UNIVERSAL HEATED OXYGEN SENSOR (HO2S) 21
534004